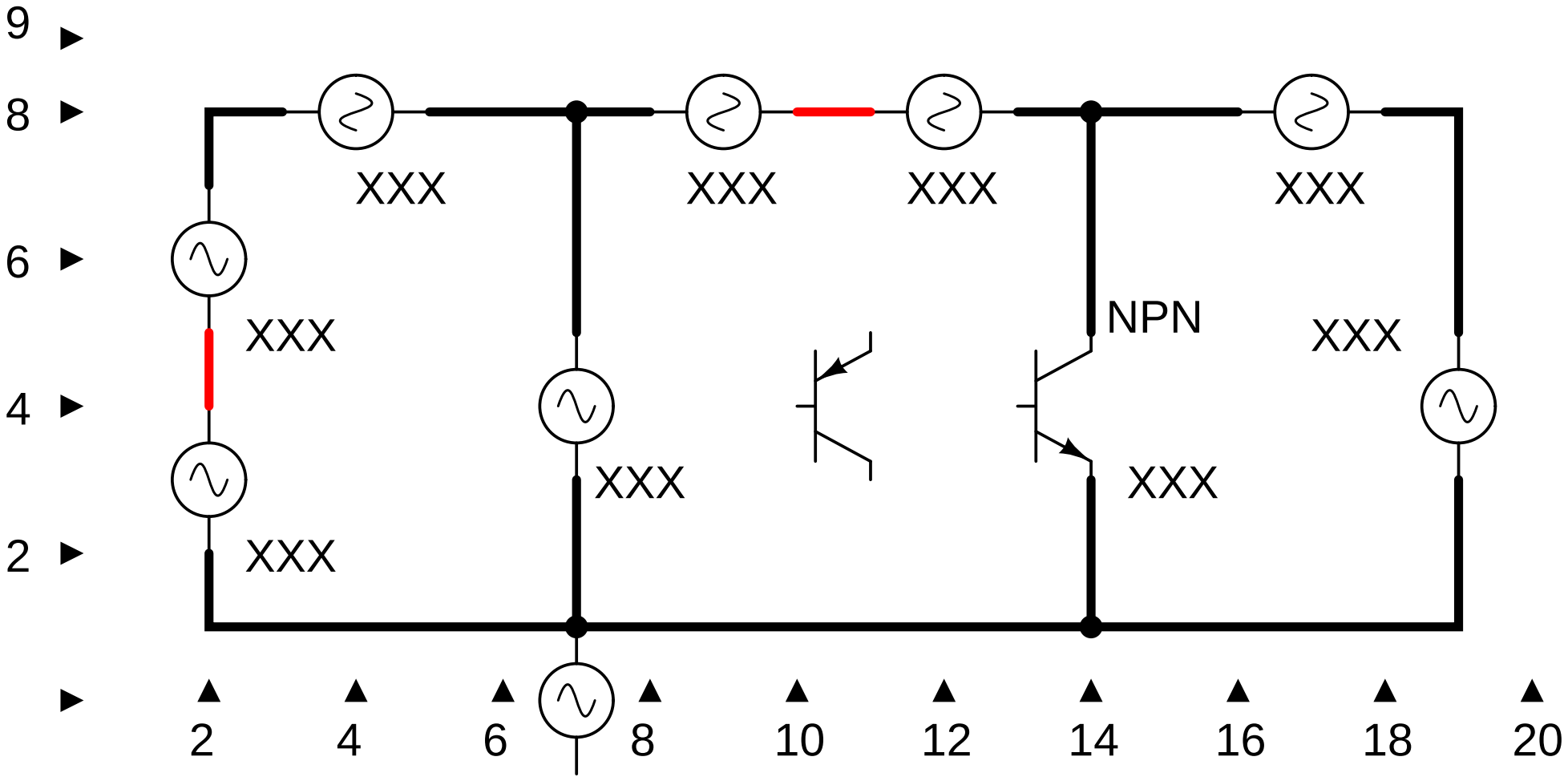

DESC: Template circuit, do not modify this one!